MARWE COMBI
RAKENNE JA VARAOSAT
KONSTRUKTION OCH RESERVDELAR
CONSTRUCTION AND SPARE PARTS
KONSTRUKTION UND ERSATZTEILE

SPARE PARTS FOR MARWE COMBI ROLLERSKIS

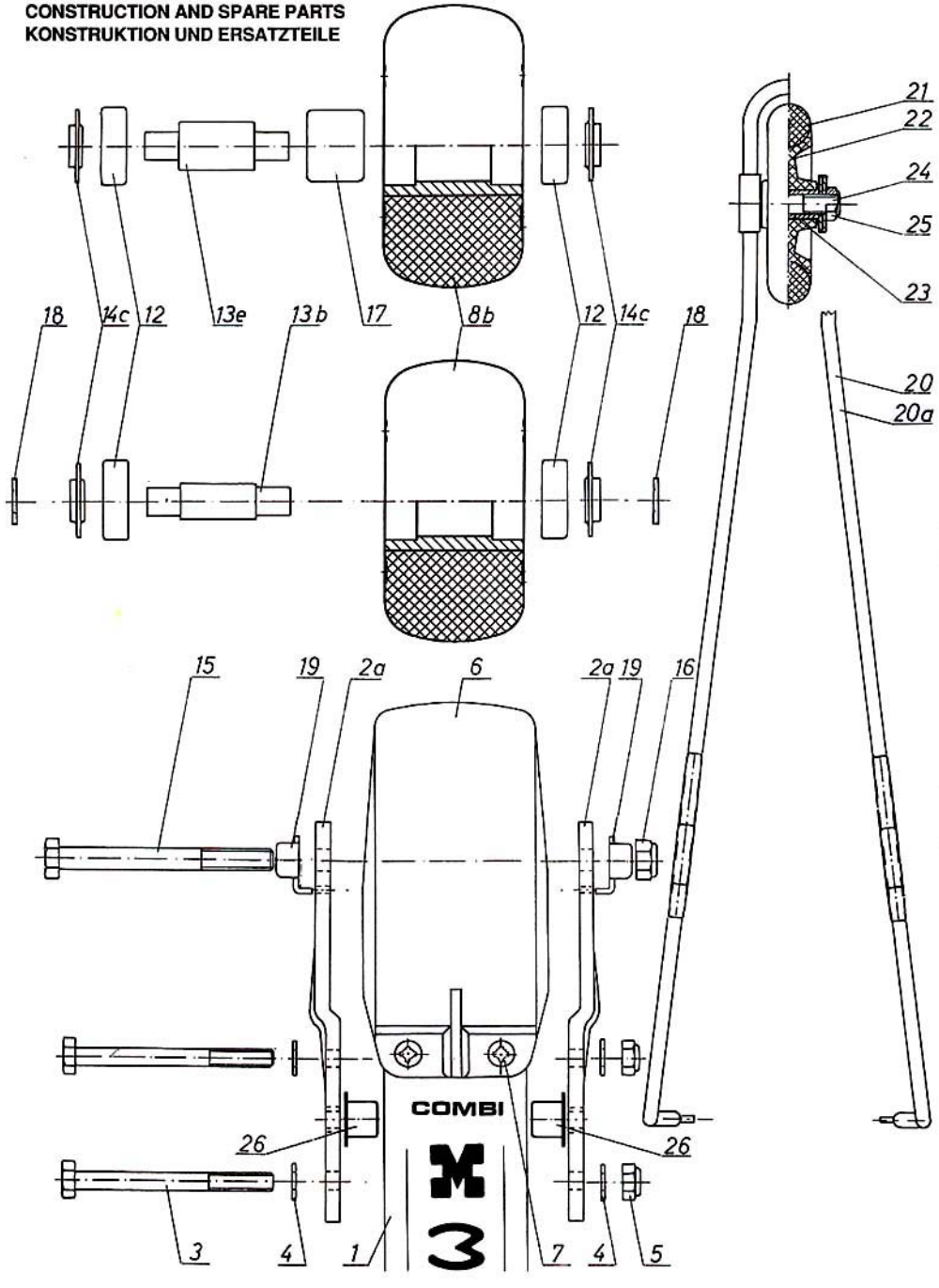

1 - Frame L=500mm
2a - Fork plate COMBI front
3 - Fork plate bolt
4 - Washer for parts 4, 5
5 - Fork plate nut
6 - Mudguard 80mm wheels
7 - Mudguard screw
8b - Wheel
12 - Roller bearings training rollerskis
13b - Axle for 80mm wheels
13e - Axle for 80mm Ratchet wheels
14c - Spacer for steel ratchet rollerskis
15 - Axle bolt for 80mm wheels
16 - Nut
17 - Ratchet bearing
18 - Washer
19 - Support strut fastening plate (rh/lh)
20a - Support strut
21 - Support wheel
22 - Support wheel hub
23 - Support wheel bearing
24 - Support wheel axle bolt

LSNo 9201-171 MK